CTZ 系列氙气探照灯

CTZ Search Light

手动 hand

电动 auto

4

应用场所 Application

- 适用于船舶、舰艇、港口、码头等露天场所搜索照明，尤其是通过狭窄航道、内河河道等比较复杂的水域时，作照射航道及两岸、水面搜索用。
- Applicable for illumination in open spaces like ships, ports, and wharfs, etc. especially for illumination of navigation channel, and search of shoreside or water surface.

型号含义 Catalogue Number Logic

CTZ □ - □ □ □

- A:电动 Auto
- B:手动 Hand
- 光源功率 Light source power
- G: 球形汞形灯(氙气灯不注)
  Spherical mercury lamp (no note for xenon lamp)
- 设计序号Design No.
  1: 500W 2: 1000W 3: 2000W
- 船用氙气探照灯 Marine search light

配光性能 Photometric data

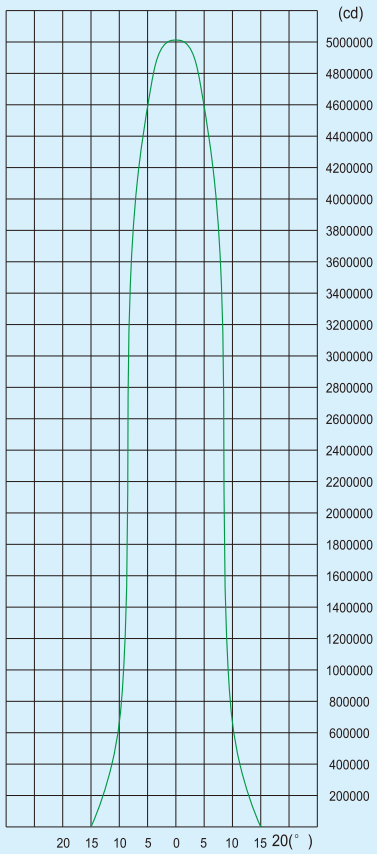

CTZ 系列氙气探照灯
CTZ Search Light

技术参数 Technical parameters

◆ 执行标准 **Compliance**	GB 11472　GB 7000.7
◆ 产品外壳 **Enclosure**	采用优质钢板或不锈钢拉伸成型，透明罩采用钢化玻璃，透光率高，抗冲击性能好，镜面铝制反射镜，反射效率高。 The enclosure is stretched formed of high quality steel plate or stainless steel, tempered glass cover, of high transmittance, anti-impact, mirror aluminum reflector, with high reflectivity
◆ 产品旋转角度 **Rotation angle**	灯体可水平旋转360°，仰俯±30°　Horizontal 360°, pitch angle of ±30°
◆ 额定电压 **Rated voltage**	220V　AC　50Hz
◆ 温度范围 **Temperature range**	–25℃~+55℃
◆ 额定功率 **Rated power**	
光源类型 Light source	氙气灯 xenon lamp　　球形汞氙灯 Spherical mercury lamp
灯具功率 Power of lamp	500W　1000W　2000W
◆ 防护等级 **Degree of protection**	IP56
◆ 防腐等级 **Corrosion-proof**	WF2
◆ 电缆外径 **Cable outer diameter**	适合 ϕ 10~ ϕ 14mm电缆连接　Suitable for cable of ϕ 10~ ϕ 14mm

选配表及外形尺寸 Selection table and outline dimension

型 号 Type	功率(W) Power	光通量 lm Luminous flux	重量(kg) Weight	安装尺寸 Size		
				L1	L2	L3
CTZ1-500A	500	68000	57	876	355	398
CTZ1-500B	500	68000	30	876	355	398
CTZ1-G500A	500	33000	57	876	355	398
CTZ1-G500B	500	33000	30	876	355	398
CTZ2-1000A	1000	120000	120	1130	526	590
CTZ2-1000B	1000	120000	62	1130	526	590
CTZ2-G1000A	1000	55000	120	1130	526	590
CTZ2-G1000B	1000	55000	62	1130	526	590
CTZ3-2000A	2000	210000	126	1130	526	590
CTZ3-2000B	2000	210000	64	1130	526	590

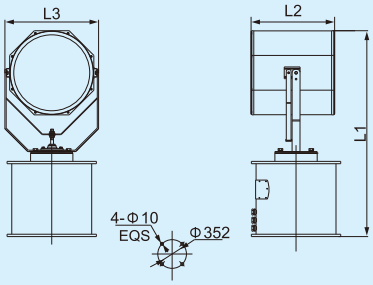

电动 auto

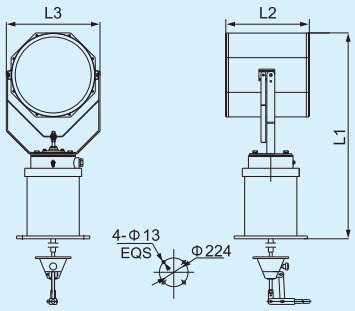

手动 hand

CTZ4 LED 探照灯

CTZ4 LED Search Light

手动 hand

电动 auto

应用场所 Application

- 适用于船舶、港口、码头等作露天场所搜索照明。
- Applicable for illumination in open spaces like ships, ports, and wharfs, etc.

型号含义 Catalogue Number Logic

CTZ4 - □□

- A:电动 Auto
- B:手动 Hand
- 光源功率 Light source power
- 船用探照灯 Search light

产品特性 Features

- 灯具能即开即亮，打开后能迅速达到正常亮度，关掉后能马上熄灭；
- LED驱动选用性能稳定的元器件，确保使用寿命长，恒流电路设计，并设有短路、过载等电路保护，确保LED能长寿命稳定工作。
- 模块化设计，结构合理，LED光源及驱动电源更换、保养、维修方便。

- The lamp is lighted on immediately after being switched on, and turned off immediately after being switched off;
- LED driver is a component of stable performance, with long service life, constant current, and with function to protect short circuit and overload, thus ensure long life and stable work of LED
- Modular design, reasonable structure, the replacement, maintenance and repair of LED and its driver are very convenient.

CTZ4 LED 探照灯
CTZ4 LED Search Light

技术参数 Technical parameters

◆ 执行标准 **Compliance**	GB 11472　GB 7000.7
◆ 产品外壳 **Enclosure**	采用优质钢板或不锈钢拉伸成型，透明罩采用钢化玻璃，透光率高，抗冲击性能好，镜面铝制反射镜，反射效率高。 The enclosure is stretched formed of high quality steel plate or stainless steel tempered glass cover, of high transmittance, anti-impact mirror aluminum reflector, with high reflectivity
◆ 产品旋转角度 **Rotation angle**	灯体可水平旋转360°，仰俯±30°　Horizontal 360°, pitch angle of ±30°
◆ 额定电压 **Rated voltage**	220V　AC　50Hz
◆ 温度范围 **Temperature range**	–25℃~+55℃
◆ 额定功率 **Rated power**	
光源类型 Light source	LED
灯具功率 Power of lamp	300W
◆ 防护等级 **Degree of protection**	IP56
◆ 防腐等级 **Corrosion-proof**	WF2
◆ 电缆外径 **Cable outer diameter**	适合φ10~φ14mm电缆连接　Suitable for cable of φ10~φ14mm

选配表及外形尺寸 Selection table and outline dimension

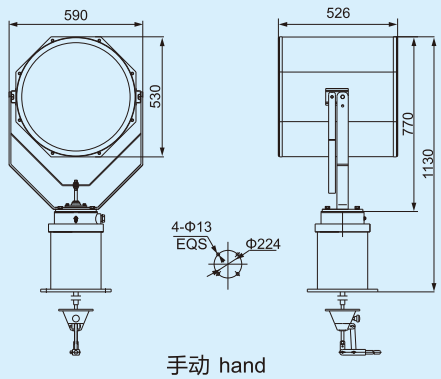

手动 hand

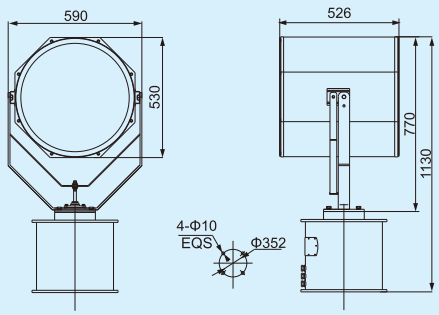

电动　auto

型 号 Type	功率(W) Power	光通量 lm Luminous flux	重量(kg) Weight
CTZ4L-300A	300	28000	57. 0
CTZ4L-300B	300	28000	30. 0